MET001 - BRD Instructions Q (20180707) NO LOGO.pdf 1 2018-09-02 11:34:07 AM

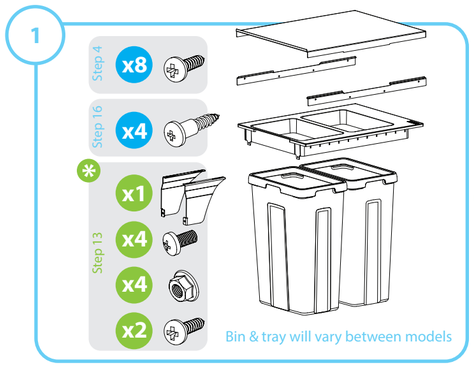

Supplied components

Door Support Brackets

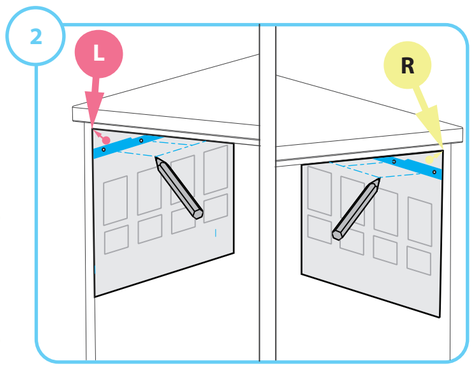

Use above template to mark holes

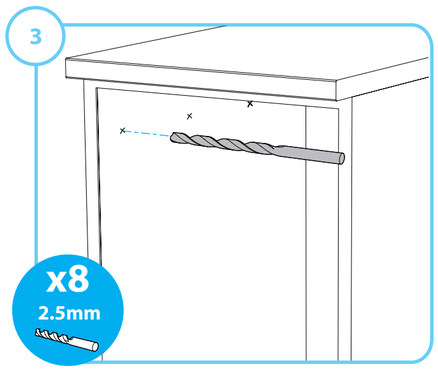

Drill marked holes

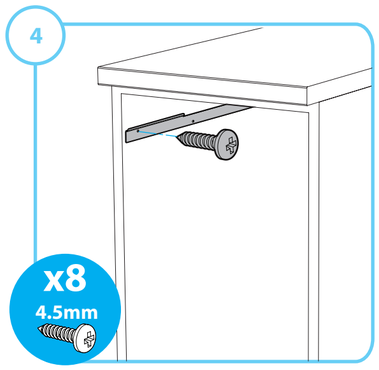

Attach both brackets

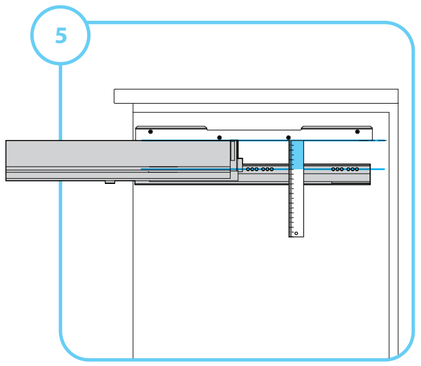

Align bottom of bracket with top of runner to measure location of mounting holes

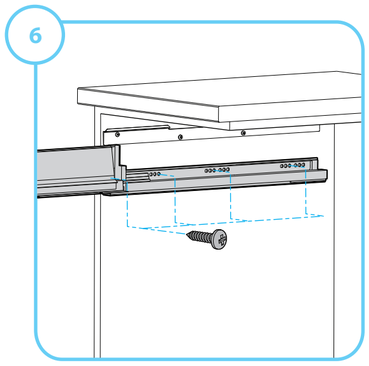

Mount runner as per manufacturers instructions (runners and screws not supplied)

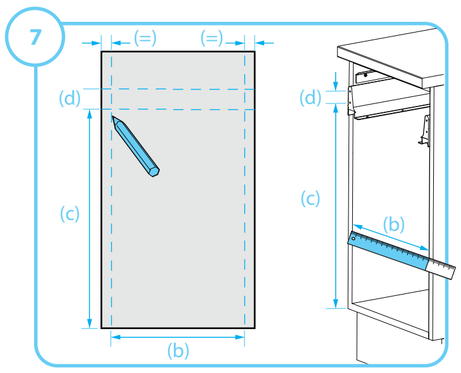

Measure the cabinet width (b), and the runner hole height (c), and spacing (d), mark on the door

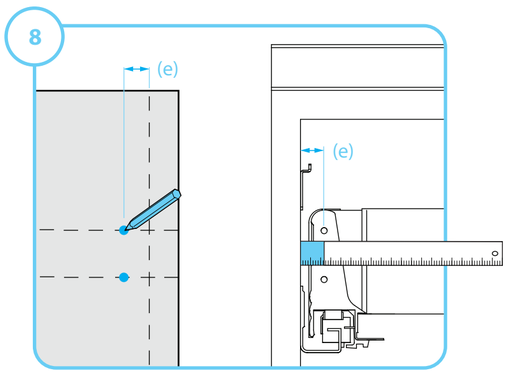

Measure the hole inset distance (e) and mark on the door

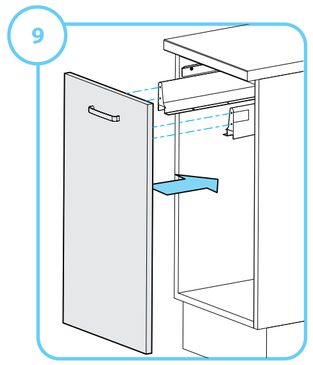

Mount door runner brackets to door and clip into the runners (screws not supplied)

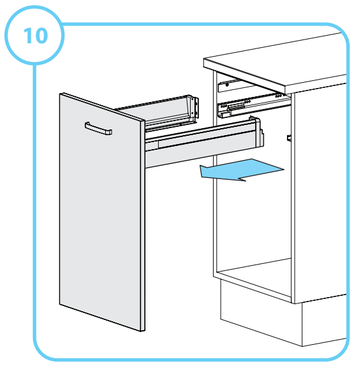

Remove drawer assembly

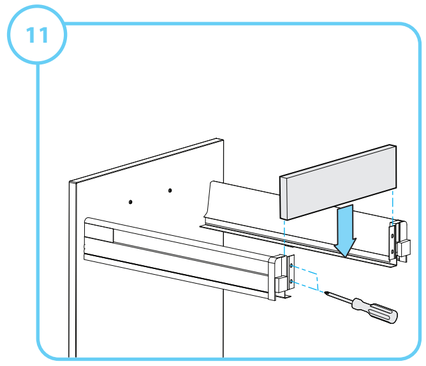

Install drawer back panel (refer to runner instructions for panel size, screws not supplied)

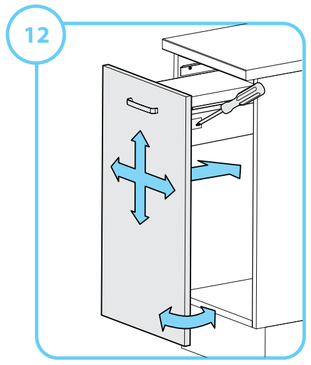

Re-install drawer assembly and adjust door

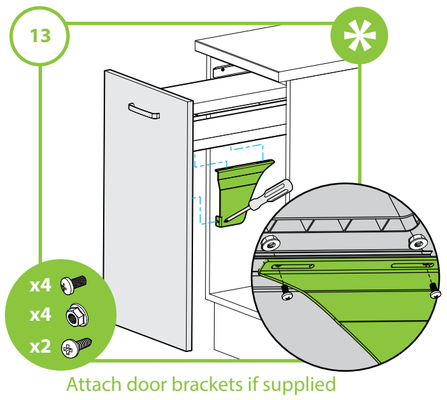

Attach door brackets if supplied

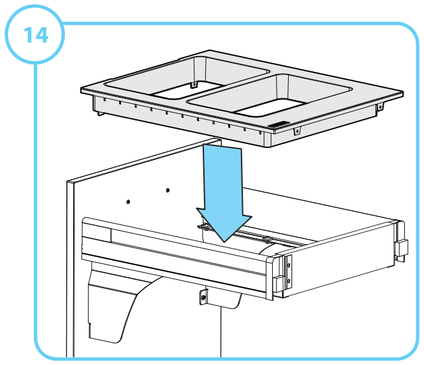

Install tray

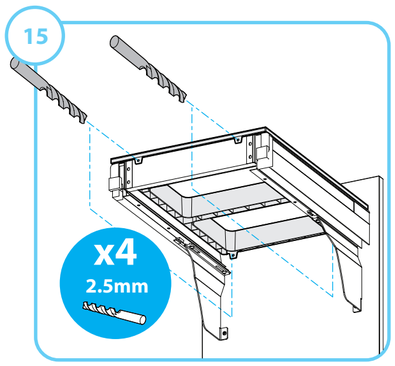

Center tray, mark and drill holes

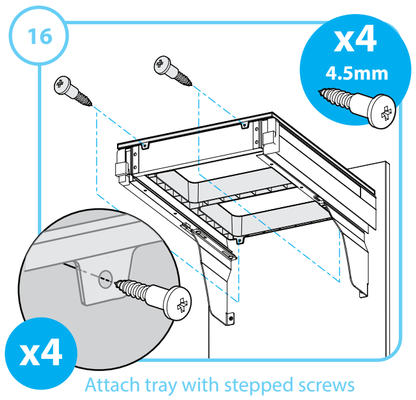

Attach tray with stepped screws

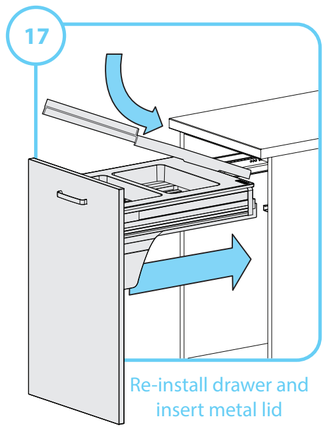

Re-install drawer and insert metal lid

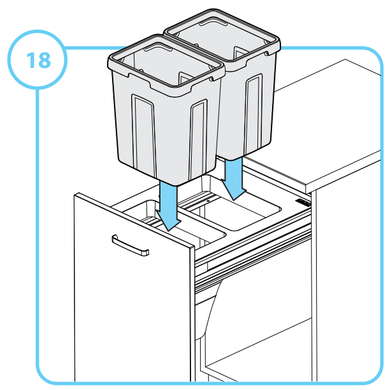

Insert bins in tray